47.25″ height + bleed

PANEL C (Inside)

47.25″ height + bleed

PANEL C (Outside)

112.5625″ width + bleed

35.3125″ width + bleed

PANEL B

86.5″ height + bleed

47.25″ height + bleed

PANEL D (Inside)

47.25″ height + bleed

PANEL D (Outside)

112.5625″ width + bleed

35.3125″ width + bleed

PANEL E

18″ width + bleed

PANEL G
(Front -
Double Sided)

optional
monitor
obstruction

PANEL G
(Back -
Double Sided)

107.3125″ width + bleed

PANEL A (Inside)

12″ height + bleed

PANEL A (Outside)

12″ height + bleed

109.5″ width + bleed

18″ width + bleed

PANEL H
(Front -
Double Sided)

optional
monitor
obstruction

PANEL H
(Back -
Double Sided)

49″ height + bleed

49″ height + bleed

107.3125″ width + bleed

PANEL F (Inside)

12″ height + bleed

PANEL F (Outside)

12″ height + bleed

109.5″ width + bleed

18″ width + bleed

PANEL I
(Front -
Double Sided)

PANEL I
(Back -
Double Sided)

94.25″ width + bleed

Hybrid Pro Modular Kit:
Hybrid Pro Modular Kit 17

TEMPLATE @ 1/2 SIZE
Dye Sub Graphic Panel A and F (Double Sided)
Inside Dimension
Total Graphic Area: 117.3125"w x 22"h
Finished Graphic Area: 107.3125"w x 12"h
Outside Dimension
Total Graphic Area 119.5"w x 22"h
Finished Graphic Area: 109.5"w x 12"h

Dye Sub Graphic Panel C and D (Double Sided)
Inside Dimension
Total Graphic Area: 120.75"w x 57.25"h
Finished Graphic Area: 110.75"w x 47.25"h
Outside Dimension
Total Graphic Area 122.5625"w x 57.25"h
Finished Graphic Area: 112.5625"w x 47.25"h

Dye Sub Fabric Panel B and E
Total Graphic Area: 39.3125"w 90.5"h
Finished Graphic Area: 35.3125"w x 86.5"h

Dye Sub Fabric Panel M and N
Total Graphic Area: 98.5"w 98.25"h
Finished Graphic Area: 94.5"w x 94.25"h

UV Graphic J, K, L
Total Graphic Area: 38.25"w x 36.1875"h
Finished Graphic Area: 37.25"w x 35.1875"h

UV Graphic G, H, I
Total Graphic Area: 19"w x 50"h
Finished Graphic Area: 18"w x 49"h
(Graphic must be mirrored if designing as double sided - not a standard offering)

Please be sure to include 2" bleed around the perimeter of B, E, M and N.

Please be sure to include 5" bleed around the perimeter of A, C, D and F.

Please be sure to include .5" bleed around the perimeter of G, H, I, J, K and L.

Please consider obstructions and spaces created by the extrusions when designing your graphics.

Please design the hybrid counter artwork on a separate template.

General Art Guidelines:

- CMYK Color Mode
- All Solid Coated Pantone colors should be called out in the art as spot colors
- Embed all images and support files
- Resolution must be 200-240 ppi at 1/2 size. 100-120 ppi at full size
- All fonts must be created to outlines
- Do not scale artboard
- Background color/images must bleed to the edge of artboard
- Do not use spot colors from template in your artwork as they will not print

PANEL M

94.25″ visual height + bleed

37.25″ width + bleed

PANEL J

35.1875″ visual height + bleed

PANEL K

35.1875″ visual height + bleed

37.25″ width + bleed

PANEL L

35.1875″ visual height + bleed

94.25″ width + bleed

PANEL N

bleed area
trim line
safe zone

94.25″ visual height + bleed

PANEL A (Inside)

PANEL A (Outside)

PANEL B

PANEL C (Inside)

PANEL C (Outside)

PANEL D (Inside)

PANEL D (Outside)

PANEL E

PANEL F (Inside)

PANEL F (Outside)

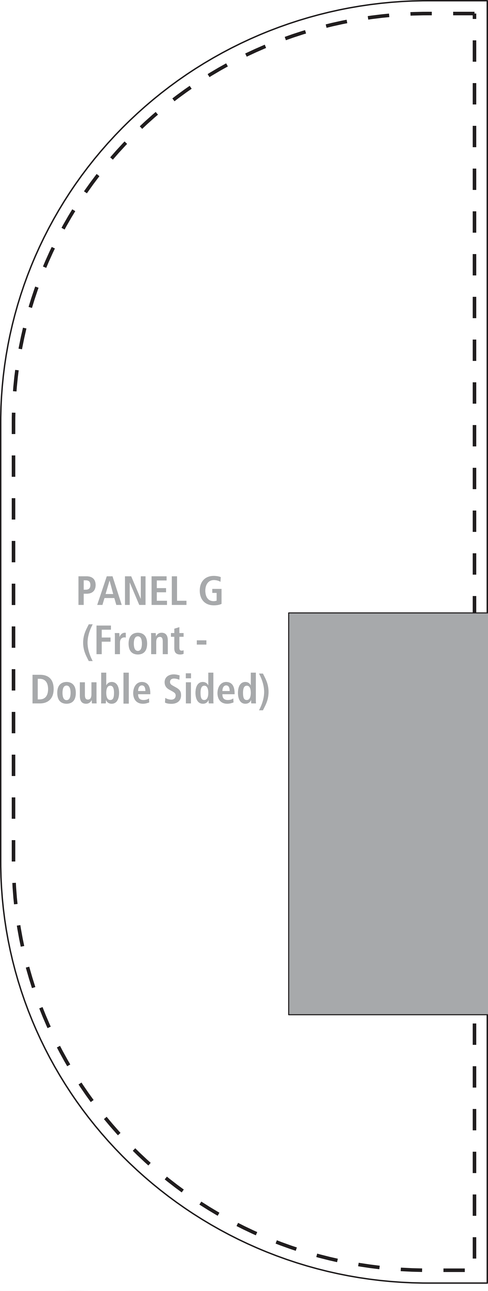
PANEL G
(Front -
Double Sided)

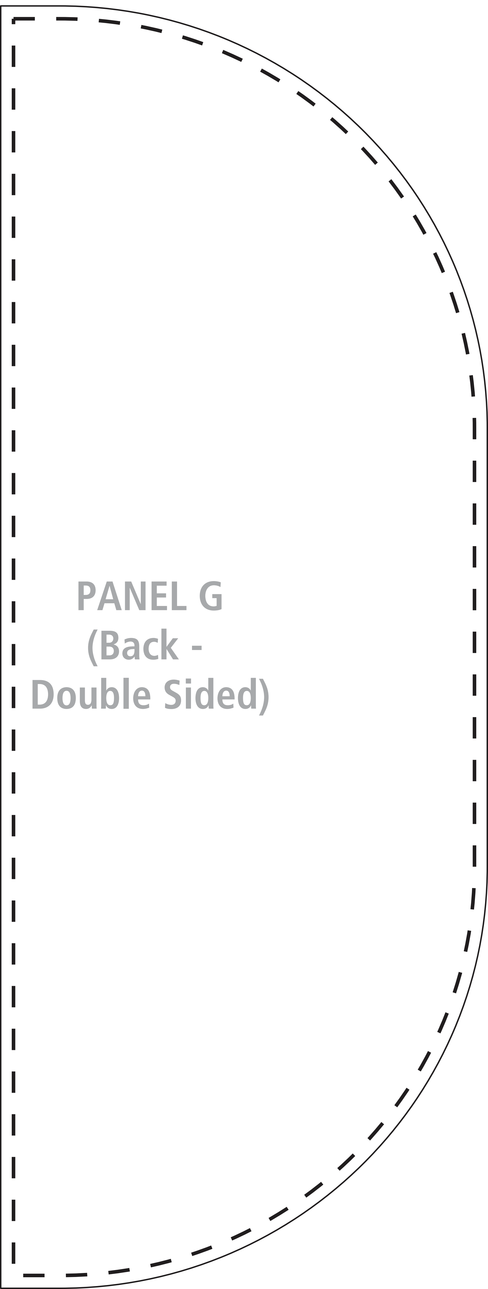
PANEL G
(Back -
Double Sided)

PANEL H
(Front -
Double Sided)

PANEL H
(Back -
Double Sided)

PANEL I
(Front -
Double Sided)

PANEL I
(Back -
Double Sided)

PANEL J

PANEL K

PANEL L

Hybrid Pro Modular Kit:
Hybrid Pro Modular Kit 17

TEMPLATE @ 1/2 SIZE
Dye Sub Graphic Panel A and F (Double Sided)
Inside Dimension
Total Graphic Area: 117.3125”w x 22”h
Finished Graphic Area: 107.3125”w x 12”h
Outside Dimension
Total Graphic Area:119.5”w x 22”h
Finished Graphic Area: 109.5”w x 12”h

Dye Sub Graphic Panel C and D (Double Sided)
Inside Dimension
Total Graphic Area: 120.75”w x 57.25”h
Finished Graphic Area: 110.75”w x 47.25”h
Outside Dimension
Total Graphic Area:122.5625”w x 57.25”h
Finished Graphic Area: 112.5625”w x 47.25”h

Dye Sub Fabric Panel B and E
Total Graphic Area: 39.3125”w 90.5”h
Finished Graphic Area: 35.3125”w x 86.5”h

Dye Sub Fabric Panel M and N
Total Graphic Area: 98.5”w 98.25”h
Finished Graphic Area: 94.5”w x 94.25”h

UV Graphic J, K, L
Total Graphic Area: 38.25”w x 36.1875”h
Finished Graphic Area: 37.25”w x 35.1875”h

UV Graphic G, H, I
Total Graphic Area: 19”w x 50”h
Finished Graphic Area: 18”w x 49”h
(Graphic must be mirrored if designing
as double sided - not a standard offering)

Please be sure to include 2” bleed around
the perimeter of B, E, M and N.

Please be sure to include 5” bleed around
the perimeter of A, C, D and F.

Please be sure to include .5” bleed around
the perimeter of G, H, I, J, K and L.

Please consider obstructions and spaces
created by the extrusions when designing
your graphics.

Please design the hybrid counter artwork
on a separate template.

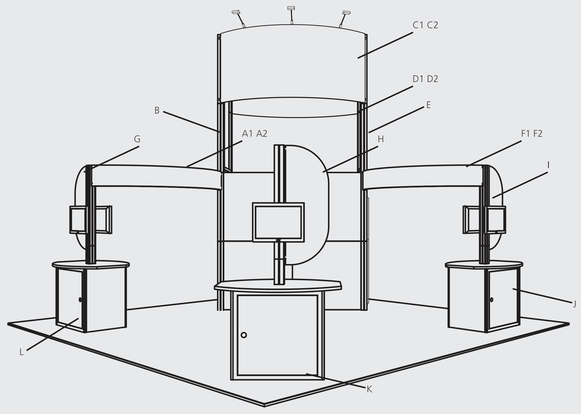

PANEL M

General Art Guidelines:

- CMYK Color Mode
- All Solid Coated Pantone colors should be called out in the art as spot colors
- Embed all images and support files
- Resolution must be 200-240 ppi at 1/2 size, 100-120 ppi at full size
- All fonts must be created to outlines
- Do not scale artboard
- Background color/images must bleed to the edge of artboard
- Do not use spot colors from template in your artwork as they will not print

PANEL N

bleed area
trim line
safe zone