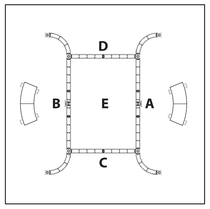

Aahrus
20' x 20' Truss System
UV Printed

TEMPLATE SET-UP AT 1/4 SCALE

Panels AH1-A, AH3-A, AH1-B, AH3-B:
Total Graphic Area: 40.5"w x 84.75"h
Finished Size: 39.5"w x 83.75"h
Visual Size: 39.5"w x 83.75"h

Panel AH2-A and AH2-B:
Total Graphic Area: 130.75"w x 38.75"h
Finished Size: 129.75"w x 37.75"h
Visual Size: 129.75"w x 37.75"h

Panels AH1-C, AH3-C, AH1-D, AH3-D:
Total Graphic Area: 50"w x 84.75"h
Finished Size: 49"w x 83.75"h
Visual Size: 49"w x 83.75"h

Panels AH2-C and AH2-D:
Total Graphic Area: 94.75"w x 38.75"h
Finished Size: 93.75"w x 37.75"h
Visual Size: 93.75"w x 37.75"h

Panels AH1-E and AH3-E:
Total Graphic Area: 130.75"w x 38.75"h
Finished Size: 129.75"w x 37.75"h
Visual Size: 128.875"w X 36.875"h

Panels AH2-E and AH4-E:
Total Graphic Area: 94.75"w x 38.75"h
Finished Size: 93.75"w x 37.75"h
Visual Size: 92.875"w X 36.875"h

Template requires 1/8" bleed around the perimeter (1/2" around the perimeter when scaled to 400% and printed)

FS = Graphic is front side mounted (3/4" w velcro is applied to the back of the panel)
BS = Graphic is back side mounted (3/4" w velcro is applied to the front of the panel)
Notching = 7/8" square that is cut into the appropriate location.
Hinging= 7/8" strip of material that is created by notching the graphic. Allows two graphics to share the same extrusion corner.

General Art Guidelines:

– CMYK Color

– Do not embed images, supply them

– Resolution must be 400-480 ppi @ fourth size, 100-120 ppi @ full size

– All fonts must be created to outlines

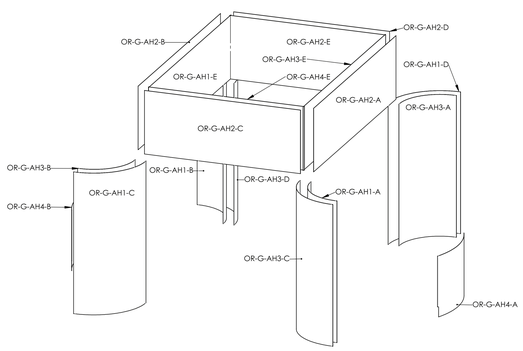

129.75" width
37.75" height
FS
OR-G-AH2-A

39.5" width
bleed area
trim line
83.75" height
FS
OR-G-AH1-A

39.5" width
83.75" height
FS
OR-G-AH3-A

93.75" width
37.75" height
FS
OR-G-AH2-C
panel is notched 7/8"
on bottom left and right corners

49" width
bleed area
trim line
83.75" height
FS
OR-G-AH1-C
panel is notched 7/8"
on top right corner

49" width
83.75" height
FS
OR-G-AH3-C
panel is notched 7/8"
on top left corner

129.75" width
37.75" height
FS
OR-G-AH2-B

39.5" width
bleed area
trim line
83.75" height
FS
OR-G-AH1-B

39.5" width
83.75" height
FS
OR-G-AH3-B

93.75" width
37.75" height
FS
OR-G-AH2-D
panel is notched 7/8"
on bottom left and right corners

49" width
bleed area
trim line
83.75" height
FS
OR-G-AH1-D
panel is notched 7/8"
on top right corner

49" width
83.75" height
FS
OR-G-AH3-D
panel is notched 7/8"
on top left corner

129.75" width
93.75" width
bleed area
trim line
37.75" height
FS
OR-G-AH1-E
panel is notched 7/8"
on all 4 corners.
Inward hinged on
left and right side.
FS
OR-G-AH2-E
panel is notched 7/8"
on all 4 corners.
Inward hinged on
left and right side.
7/8" inward hinge
on left and right edges
no spacing between
panels once mounted,
gray line indicates visual
edge of graphics
no spacing between
panels once mounted,
gray line indicates visual
edge of graphics
no spacing between
panels once mounted,
gray line indicates visual
edge of graphics

129.75" width
93.75" width
bleed area
trim line
37.75" height
FS
OR-G-AH3-E
panel is notched 7/8"
on all 4 corners.
Inward hinged on
left and right side.
FS
OR-G-AH4-E
panel is notched 7/8"
on all 4 corners.
Inward hinged on
left and right side.
7/8" inward hinge
on left and right edges
no spacing between
panels once mounted,
gray line indicates visual
edge of graphics
no spacing between
panels once mounted,
gray line indicates visual
edge of graphics
no spacing between
panels once mounted,
gray line indicates visual
edge of graphics